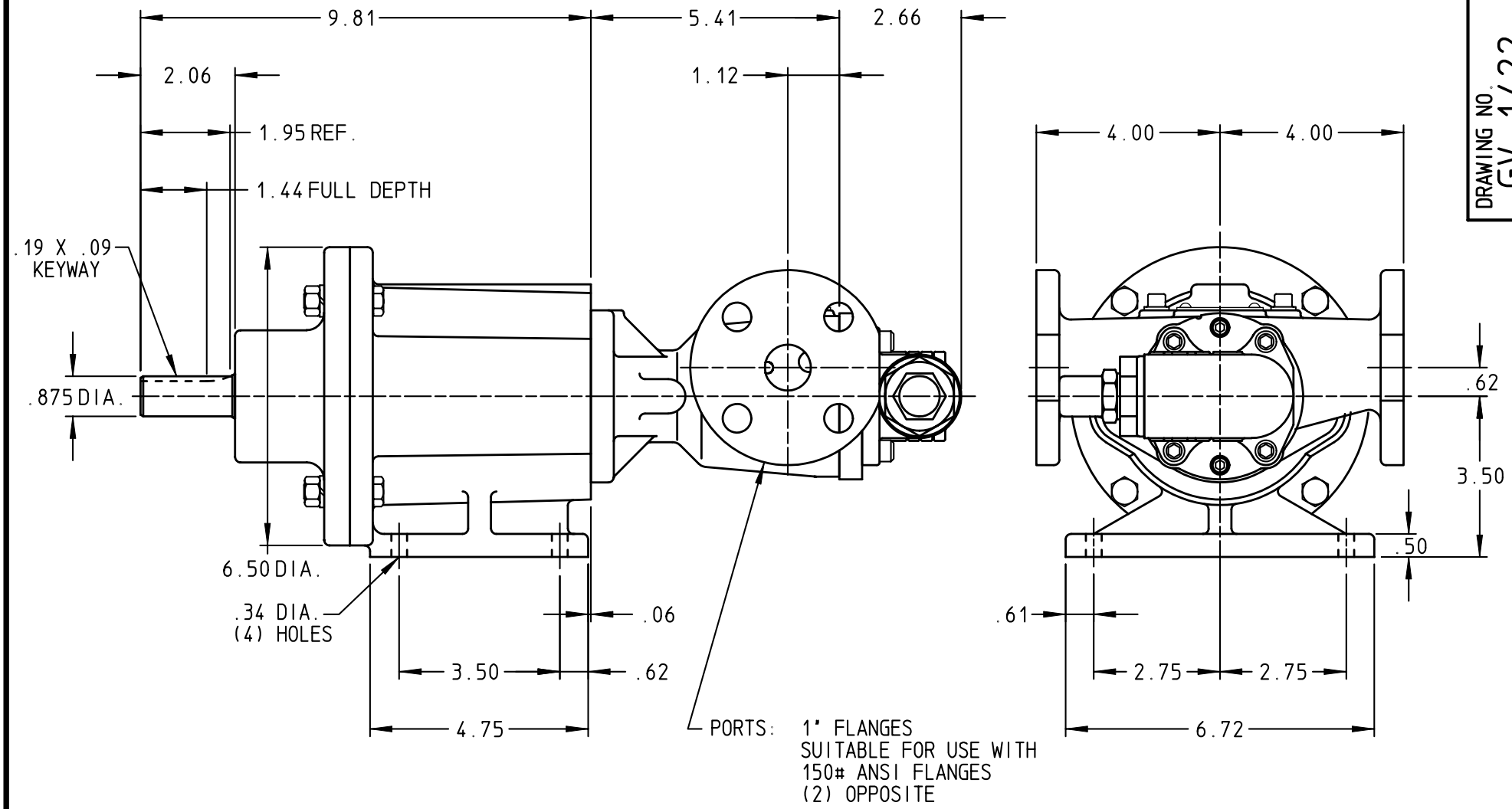

DRAWING NO. GV-1422

STANDARD MODELS: GG-897-MDA4-B, GG-897-MDA9-B

DRAWN JAKEL DATE 01 MAR 2005 CHECKED SJJ DATE 01 MAR 2005	THIS DRAWING IS THE PROPERTY OF VIKING PUMP INC. AND IS PROPRIETARY IN GENERAL AND DETAIL. IT SHALL NOT BE COPIED OR ITS CONTENTS REVEALED TO OUTSIDE PARTIES WITHOUT THE WRITTEN CONSENT OF VIKING PUMP INC.	VIKING PUMP VIKING PUMP, INC. A Unit of IDEX Corporation Cedar Falls, Iowa 50613 U.S.A.	DRAWING NO. GV-1422	REV. A 01 MAR 2005