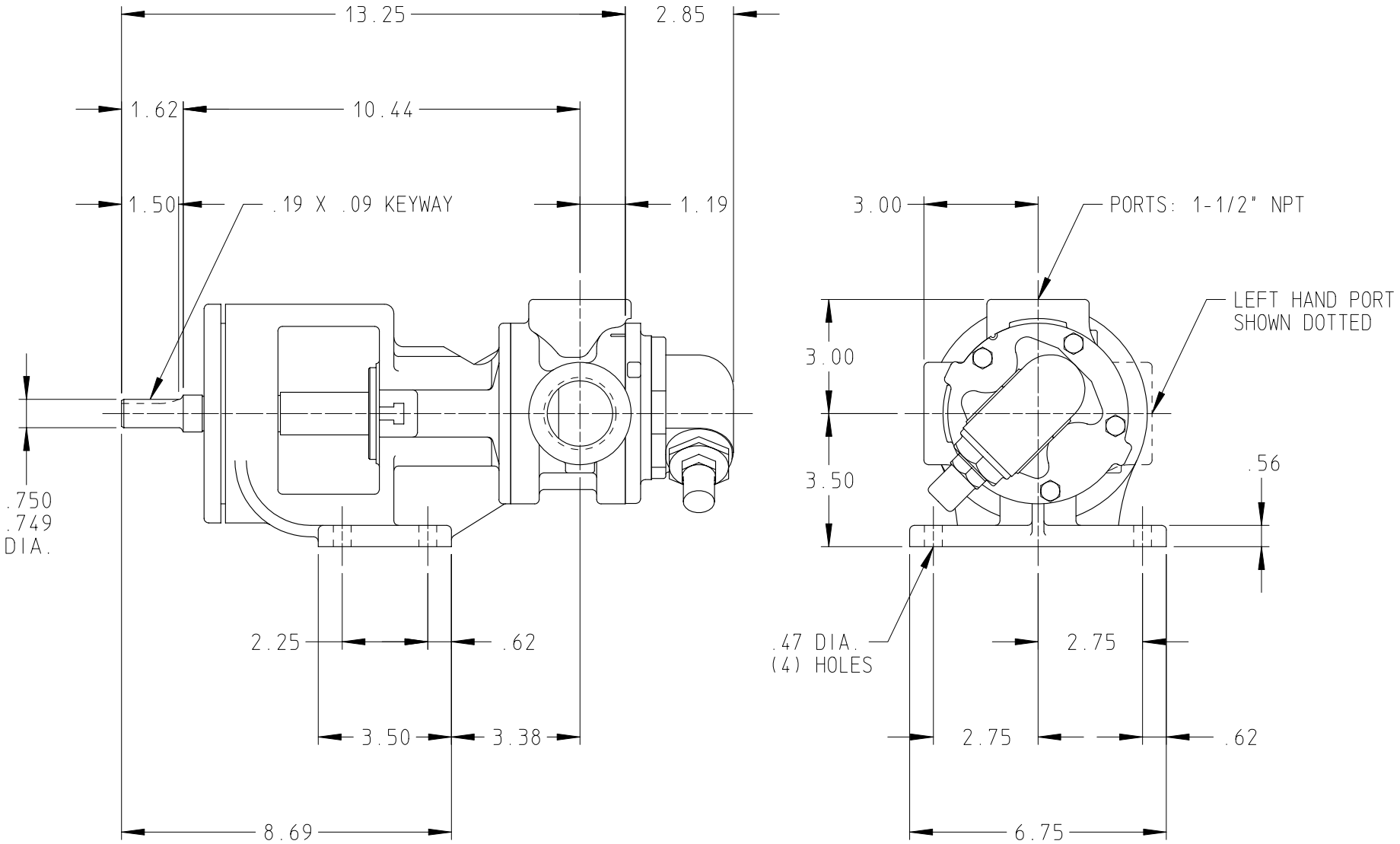

DRAWING NO. HV-3285

STANDARD MODELS: H124A, H4124A, H4124B, HL124A, HL4124A, HL4124B, H126A, H4126A, HL126A, HL4126A

DRAWN JASON DATE 14 JAN 1998 CHECKED DC DATE 20 JAN 1998	THIS DRAWING IS THE PROPERTY OF VIKING PUMP INC. AND IS PROPRIETARY IN GENERAL AND DETAIL. IT SHALL NOT BE COPIED OR ITS CONTENTS REVEALED TO OUTSIDE PARTIES WITHOUT THE WRITTEN CONSENT OF VIKING PUMP INC.	VIKING PUMP VIKING PUMP, INC. A Unit of IDEX Corporation Cedar Falls, Iowa 50613 U.S.A.	DRAWING NO. HV-3285	REV. D 25 AUG 2003