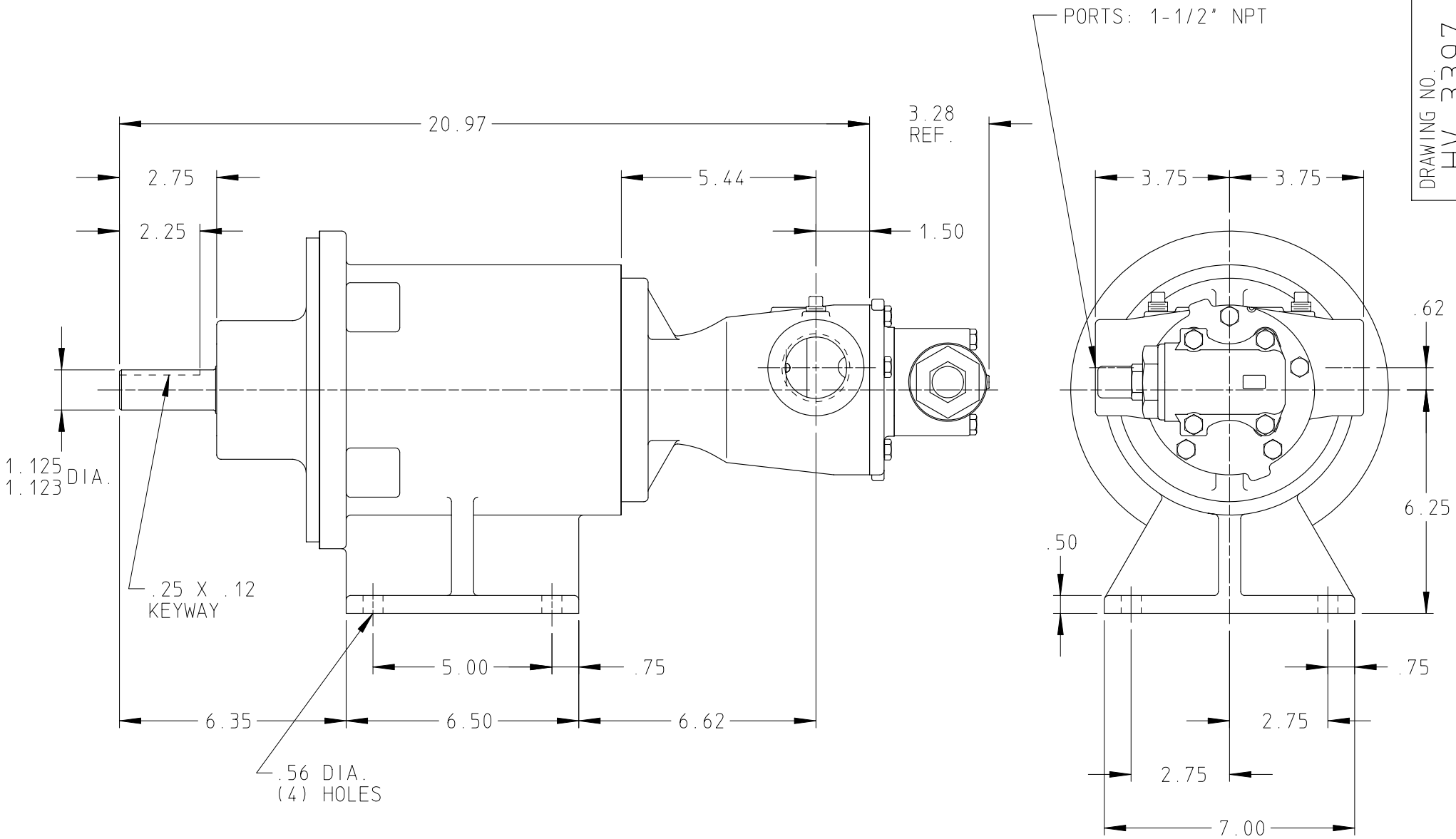

DRAWING NO. HV-3397

STANDARD MODELS: HJ 895-MDB15-B, HL 895-MDB15-B, HJ 895-MDB40-B, HL 895-MDB40-B

DRAWN RICH M DATE 16 JAN 2001 CHECKED DRS DATE 18 JAN 2001	THIS DRAWING IS THE PROPERTY OF VIKING PUMP INC. AND IS PROPRIETARY IN GENERAL AND DETAIL. IT SHALL NOT BE COPIED OR ITS CONTENTS REVEALED TO OUTSIDE PARTIES WITHOUT THE WRITTEN CONSENT OF VIKING PUMP INC.	VIKING PUMP VIKING PUMP, INC. A Unit of IDEX Corporation Cedar Falls, Iowa 50613 U.S.A.	DRAWING NO. HV-3397	REV. B 27 AUG 2003