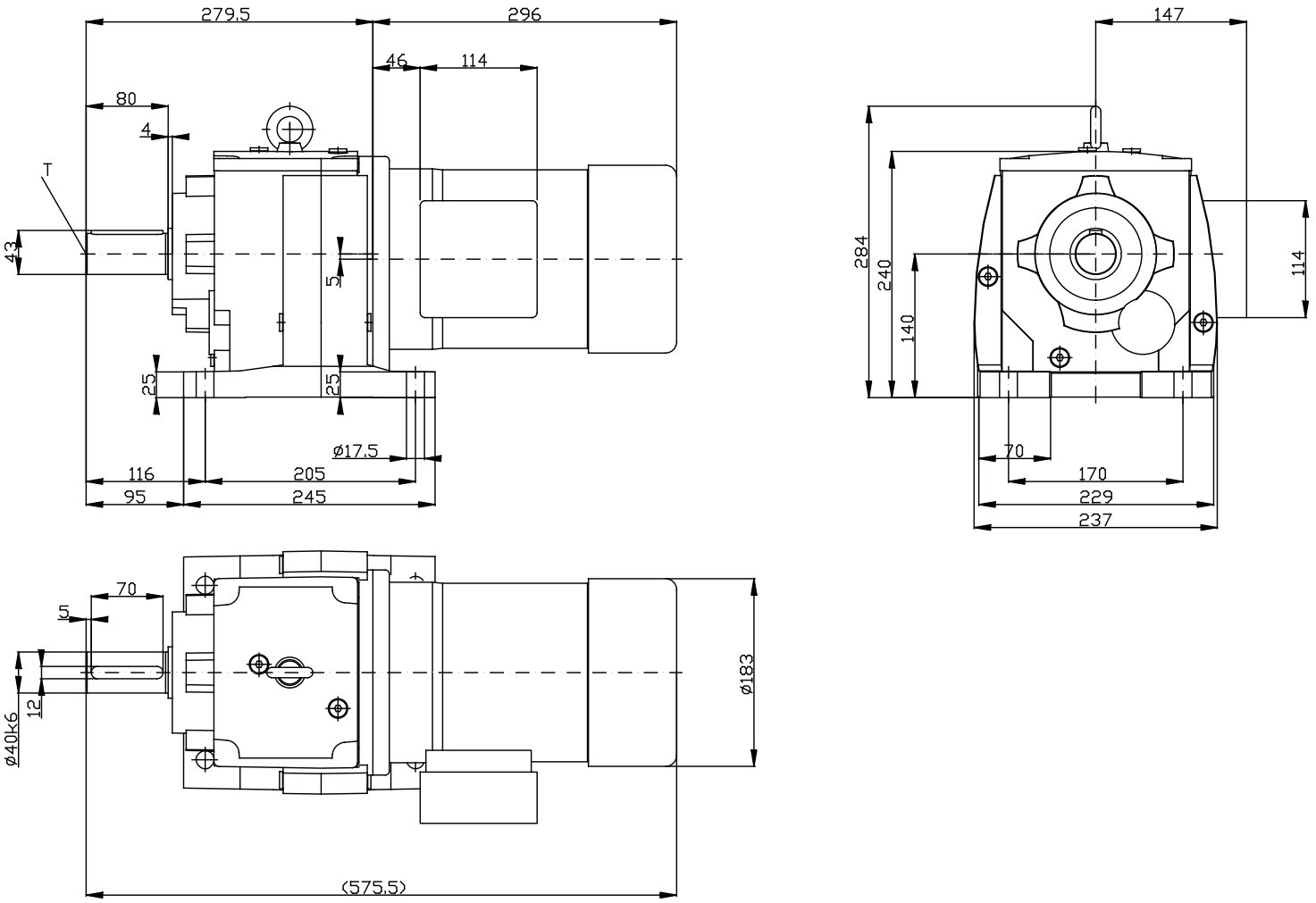

SK 773.1 - 90 LH

NORD

Nord Internet: http://www.nord.com

	Date	Name
Drawn	2/19/2013	mklunenberg

T: M16

Technical design may subject to change!
This drawing was made by NORD CAD 7.0.6