MOTOR SPEED PRODUCT LINE:
CAST IRON SEALLESS MAG DRIVE PUMPS
SERIES 855

Section	685
Page	685.1
Issue	F

Model AK855UB-MD2 B32-B
U.S. Inch Design with ANSI- Compatible Flanged Ports, B32 Coupling and Bearing Carrier

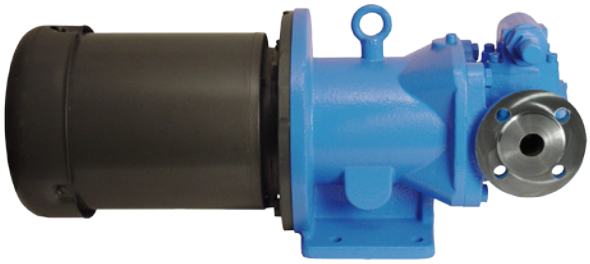

Model GG855MA-MD2 A9-M
Metric Design with DIN 2501 Flange Ports, A9 Coupling and Close-coupled to IEC B-5 Flange Motor

PRODUCT DESCRIPTION

The Viking Mag Drive® Series 855 is a series of sealless, positive displacement internal gear pumps. The driver shaft is magnetically coupled to the rotor shaft, using magnetic force passing through a stainless steel containment canister, eliminating traditional shaft seals. This provides the highest assurance of liquid and gas containment. It eliminates problems of seal leakage, fugitive emissions, seal wear and periodic seal maintenance or replacement.

Patent applied for.

APPLICATIONS

While Viking Mag Drive Series 855 sealless pumps may be used in any application to minimize the need for regular seal inspection and maintenance, they are particularly useful for:

- Hazardous liquids (e.g. caustics, ammonia, solvents)
- Hard-to-seal liquids, usually those that crystallize at seal faces (e.g. isocyanates)
- Liquids which set up on contact with air (e.g. adhesives)
- Odorants (e.g. mercaptans)
- Costly liquids, where leakage is expensive
- Inaccessible or remote locations where seal inspection and maintenance is impractical

SERIES OPERATING RANGE

Nominal Capacity	5 to 130 gpm	1.1 to 29.5 m3/hr
Max. Differential Pressure	to 200 PSI	to 14 Bar
Max. Hydrostatic Pressure	to 400 PSI	to 28 Bar
Viscosity Range	28 to 250,000 SSU	1 to 55,000 cSt
Temperature Range (standard Neodymium Iron Boron Magnets)	-60º to 225ºF	-51º to 107ºC
Temperature Range (optional Samarium Cobalt Magnets)	-60º to 500ºF	-51º to 260ºC

NOMINAL FLOW RATES

Pump Model	Speed	Capacity	
	RPM*	GPM	m^3/hr
GS855	1750	5	1.1
GG855	1750	10	2.2
HJ855	1750	20	4.5
HL855	1750	30	6.8
AS855	1450	42	9.5
AK855	1450	66	15
AL855	1450	88	20
KE855	1150	94	21.3
KKE855	1150	130	29.5

* Pump speed of 1750 RPM for A -AL sizes, 1450 RPM for KE and KKE sizes with approval. Contact Viking Application Engineering.

MOTOR SPEED PRODUCT LINE:
CAST IRON SEALLESS MAG DRIVE PUMPS
SERIES 855

FEATURES & BENEFITS

- •Short-term Run-dry Capability. Unlike many mag-drive pumps, the Viking Mag Drive® series may be run dry for short periods, such as for clear lines when unloading, or in the case of accidental empty tank situations.
- Reversible Direction Of Flow. The pump operates in either direction, allowing one pump to be used for both loading and unloading. Pump curves are based on clockwise rotation (looking from the motor end). There is a slight reduction in capacity with counterclockwise rotation.
- Adjustable End Clearance. The use of head shims allows the end clearance to be adjusted for fluid viscosity or to compensate for wear over time.
- Reliability. These pumps were designed to provide exceptional reliability and freedom from down time and maintenance.
- High Pressure Capability. They are capable of handling up to 200 psi (14 bar) differential pressure
- Motor Speed Operation. The ability to run at 50 or 60 Hz synchronous motor speeds on many fluids eliminates the need for gear reducers or gear motors, reducing the overall cost and footprint of the pumping unit.
- High Torque Capability. The high strength magnets are designed to operate at higher pressures and handle viscous liquids without decoupling.
- Ease of Disassembly And Reassembly. These pumps are designed to be easily disassembled with no special tools required. Reassembly is just as simple. Drain plugs enable easy drainage and flushing when changing fluids.

OPTIONS

- Choose between motor mounts for NEMA-C or IEC B-5 flange motors for motor speed applications, or solid input shaft with bearing carrier for applications requiring speed reducers, gear motors or belt drives (belt drive not recommended with A or B size couplings).
- External Flush. A solid rotor shaft option with external flush or barrier fluid may be used to minimize slip on thin liquids or to maintain flow of canister cooling liquids on viscous liquids. This will result in some cross-contamination between the pumpage and the flush liquid.
- Temperature Monitoring. The bracket is drilled and tapped as standard to accept an optional sensor for monitoring canister temperature as a means of preventing thermal degredation of product or damage to pump and magnets in the event of cooling system blockage or loss of flow.
- Run-Dry Monitoring. The Viking Power Load Monitor is an accessory that continuously monitors motor power and compares it to normal operating conditions. In the event of underload (run-dry), the Power Load Monitor can automatically shut down the pump or trigger alarm annunciation.
- ATEX Conformity. Pumps conforming to ATEX hazard prevention requirements are available.
- Rotatable Casing. The pump casings, with opposite (180 degree) ports, may be rotated in 90 degree increments.
- Magnet Options. Choice of magnet torque levels and materials ensures that the required torque and temperature capability is matched to the application.
- Material Options. Optional hard materials are available for abrasive liquid applications.
- Available As Inch Or Metric designed with Corresponding Ports, And Motor Mounts. No piping or motor adapters required to conform to local standards.

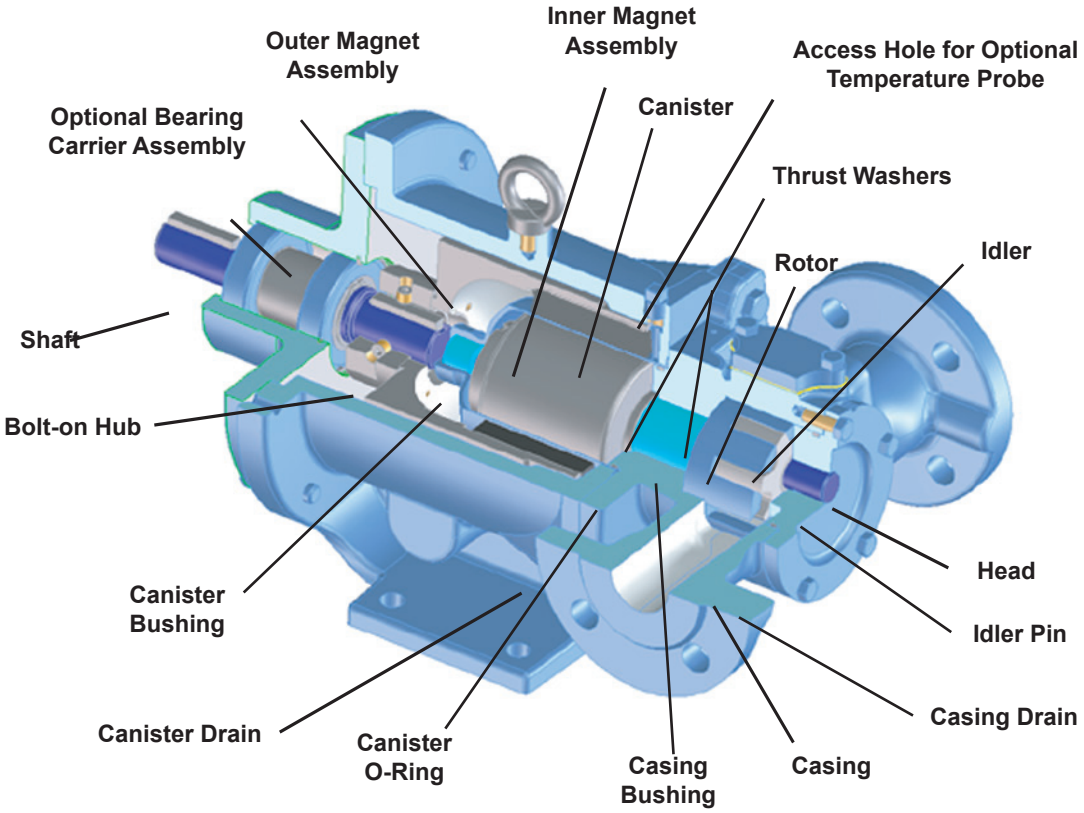

Positive Cooling Flow (indicated by small arrows) minimizes potential for thermal product degradation and to cool the magnet area. Pressure differential from the discharge side causes a cooling flow between the pump shaft and bushing, and the canister and magnet through the shaft interior and hollow idler pin back to the pump suction. This cooling flow is reversed when the pump's direction of flow is reversed.

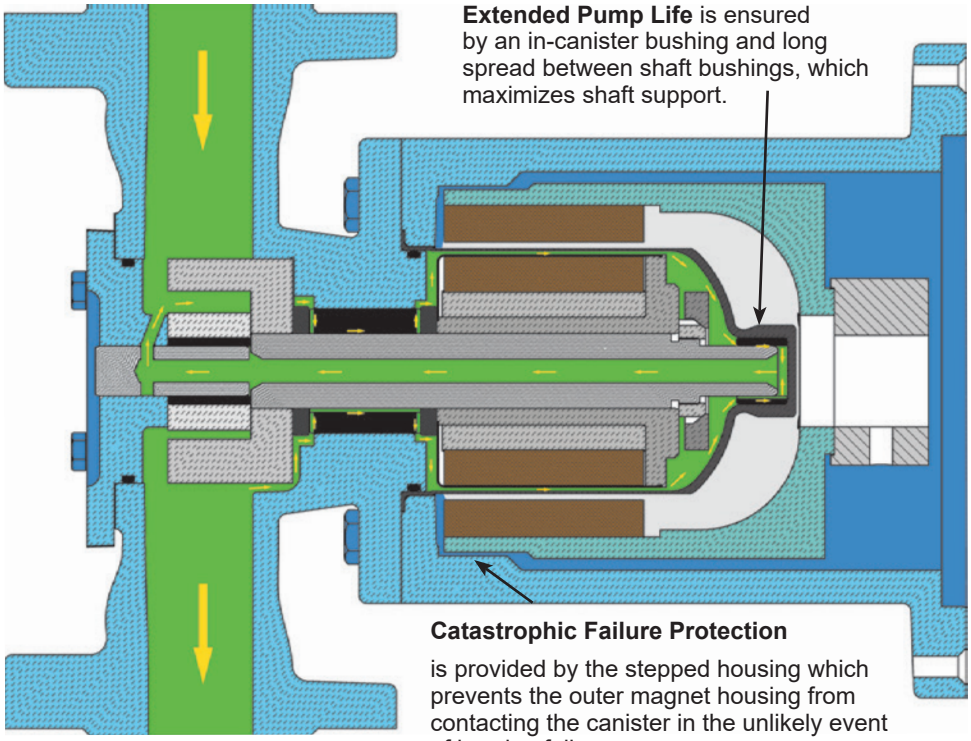

Extended Pump Life is ensured by an in-canister bushing and long spread between shaft bushings, which maximizes shaft support.

Catastrophic Failure Protection is provided by the stepped housing which prevents the outer magnet housing from contacting the canister in the unlikely event of bearing failure.

MODEL NUMBERING SYSTEM

The Viking Mag Drive Series 855 is manufactured to either Metric or US (inch) design standards, as shown in the model number. The table below lists the affected components, with model number examples for both Metric and US design standards.

Affected Components	Metric Design (M) e.g. GG855M	US (Inch) Design (U) e.g. GG855U
Pump		
Fasteners	Metric	Metric
Ports	DIN 2501-Compatible PN 16/25/40 or PN 25/40 Raised Face Flange	ANSI B16.5-Compatible 125# Class Flat Face Flange
Drive		
Motor Mount	I.E.C. B5 Flange	NEMA C-Flange
Bearing Carrier Shaft and Keys	Metric	Inch

Model numbers for the 855 series, Viking Mag Drive begin with the displacement, followed by the pump series. The last number of the series indicates the material of construction for the external components. This is followed by the coupling and drive unit designations. With this series the outer magnet and its bracket are determined by the motor frame and coupling size.

Series

GS 8 5 5 M A-MD2 A9 M

Size
GS HJ AS AL
GG HL AK KE
KKE

Seals
8 = Sealless magnetic coupling

Material
5 = Cast Iron

Design Standard
M= Metric
U= US (inch)

Coupling Size - Pump Related
A = Coupling used on GS, GG, HJ or HL,
B = Coupling used on HJ, HL, AS, AK or AL
C = Coupling used AS, AK, AL, KE or KKE

Drive Configurations
M = Motor mount*
B = Bearing carrier*
D = Direct drive*
R = Reducer drive
P = Purchased reducer

Magnetic Coupling Size and Magnet Torque Specification - Drive Related
A - 4 or 9 Ft-Lbs
B -14, 32 or 50 Ft-Lbs
C - 40, 90,135 or 180 Ft-Lbs

Magnetic Coupling Design
Second generation and is not interchangeable with previous design.

*To assure the proper bracket and outer magnet is supplied on an M unit (Motor Mounted Drive), the motor frame (NEMA or IEC) must be specified when ordering. For B and D drives specify the shaft style (inch or metric) that will be required for proper mounting on the unit.

PUMP SPECIFICATIONS

Model Numbers ④	Port Size		Nominal Flow at Rated Speed* at 22 cSt (100 SSU)				Maximum Hydrostatic Pressure		Maximum Differential Pressure* Handling 20cSt at Rated Speeds		Maximum Recommended Temperature			
	US "U" Design Std. Pump	Metric "M" Design Std. Pump									Standard Construction		High Temperature Construction	
	Inch ①	mm	Capacity at Max. Rated Speeds		Capacity at 50 Hz Motor Speeds		PSIG	BAR	PSIG	BAR	°F	°C	°F	°C
			GPM	RPM	M^3/hr	RPM								
GS855	1	25②	5	1750	0.95	1450	400	27	200	14	225	107	500	260
GG855	1	25②	10	1750	1.9	1450	400	27	200	14	225	107	500	260
HJ855	1.5	40②	20	1750	3.8	1450	400	27	200	14	225	107	500	260
HL855	1.5	40②	30	1750	5.6	1450	400	27	200	14	225	107	500	260
AS855	3	65③	42	1450	9.5	1450	400	27	150	10.3	225	107	500	260
AK855	3	65③	66	1450	15	1450	400	27	150	10.3	225	107	500	260
AL855	3	65③	88	1450	20	1450	400	27	150	10.3	225	107	500	260
KE855	3	80③	94	1150	17.8	950	400	27	150	10.3	225	107	500	260
KKE855	3	80③	130	1150	24.6	950	400	27	150	10.3	225	107	500	260

* Pressures to 200 PSI and pump speed of 1750 RPM for A - AL sizes, 1450 RPM for KE and KKE sizes with approval. Contact Viking Application Engineering.

① Standard ports are compatible with ANSI B16.5 125# Class flanges

② Standard ports are compatible with DIN 2501 PN16/25/40 flanges

③ Standard ports are compatible with DIN 2501 PN25/40 flanges

④ Refer to Page 12 for shipping weight information

COUPLING TORQUE AND SIZE OPTIONS

MAGNETIC COUPLING OPTIONS	
Pump Size	Magnetic Coupling Sizes
GS, GG	MD2-A
HJ, HL	MD2-A, MD2-B
AS, AK , AL	MD2-B, MD2-C
KE, KKE	MD2-C

TORQUE RATINGS AND DRIVER CONNECTION OPTIONS					
Magnetic Coupling Sizes	Torque Ratings (Ft-Lbs)	"M" Drive Close-Coupled		Long-Coupled	
		IEC B-5 Flange Motor Mounts	NEMA Motor Mounts	Bearing Carrier *	
				Metric	Inch
MD2-A	• 4 • 9	• 80/90 • 100/112	• 56C • 143 / 145TC • 182 / 184TC	100/112	143/145TC
MD2-B	• 14 • 32 • 50	• 100/112 • 132	• 182 / 184TC • 213 / 215TC • 254 / 256TC	100/112	213/215TC
MD2-C	• 40 • 90 • 135 • 180	• 132 • 160 • 180	• 213 / 215TC • 254 / 256TC • 284 / 286TC	132	132 **

* The bearing carrier mounts to bracket for the motor frame listed.

** The US design uses a modified IEC 132 bracket when mounting the bearing carrier.

MOTOR SPEED PRODUCT LINE:
CAST IRON SEALLESS MAG DRIVE PUMPS
SERIES 855

PUMP CONSTRUCTION

Construction	O-Ring	Casing	Head	Rotor	Idler	Rotor Shaft	Idler Pin
Standard	Buna N	Iron ASTM A48, Class 35B	Iron ASTM A48, Class 35B	①Ductile Iron ASTM A536 Grade 60-45-18	②Iron ASTM A48, Class 35B	Steel ASTM A 10, Grade 1045	Hardened Steel ASTM A108, Grade 1045
Steel Fitted	Buna N	Iron ASTM A48, Class 35B	Iron ASTM A48, Class 35B	Steel ASTM A148, Grade 90-60	Iron ASTM A48, Class 35B	Steel ASTM A 10, Grade 1045	Hardened Steel ASTM A 108, Grade 1045
Optional Construction	FKM PTFE (Derivative) Encapsulated FFKM	NA	NA	NA	PPS (Composite)	Hardened Steel	NA

Construction (cont.)	Casing Bushing	Idler Bushing	Thrust Washers	Canister Bushing	Pressure Relief Valve
Standard	Carbon Graphite	Carbon Graphite	Hardened Cast Iron	Carbon Graphite	Iron ASTM A48, Class 35B
Steel Fitted	Carbon Graphite	Carbon Graphite	Hardened Cast Iron	Carbon Graphite	Iron ASTM A48, Class 35B
Optional Construction	Hardened Cast Iron	③Hardened Cast Iron	NA	Hardened Cast Iron	NA

① GS and GG rotors are standard as cast iron.
② GS-HL Idlers are powdered metal (MPIF35-FN0208-45).
③ GS-HJ idler bushings are cast iron (not hardened).

COUPLING / BEARING CARRIER CONSTRUCTION

Construction	Bracket	Canister	Coupling Magnet ④	Canister Bushing	Bearing Carrier
Standard	Iron ASTM A48, Class 35B	316L Stainless Steel	Neodymium Iron Boron	Carbon Graphite	Cast Iron ⑤
Optional Construction	NA	NA	Samarium Cobalt	Hardened Cast Iron	NA

④ Outer magnet is nickel plated
⑤ MD2-C bearing Carrier is ductile iron.

SPECIAL MATERIALS AND OPTIONS SELECTION GUIDELINES

For High Viscosities

- Pump should be operated at slower than maximum speeds.
  Maximum recommended viscosity for motor speed operation in cSt is:

Motor Speed	Pump Size									
	GS	GG	HJ	HL	AS①	AK①	AL①	KE①	KKE①	
1750 RPM	1500	1500	1500	1500	—	—	—	—	—	cSt
	6825	6825	6825	6825						SSU
1450 RPM	1500	1500	1500	1500	500	500	500	—	—	cSt
	6825	6825	6825	6825	2275	2275	2275			SSU
1150 RPM								1500	1500	cSt
								6825	6825	SSU

- For viscosities over 15,000 cSt (68,250 SSU), contact factory for operation recommendations.
- Steel fitted construction (steel rotor) recommended above the following viscosities, according to pump size:

Viscosity	Pump Size									
	GS	GG	HJ	HL	AS	AK	AL	KE	KKE	
cSt	5,000	1500	②	②	②	②	②	②	②	cSt
SSU	22,750	6825								SSU

For Low Viscosities or Non-Lubricating Liquids - Below 20 cSt (up to 225°F or 107°C)

- PPS composite idler recommended.

For High Temperatures - Above 225°F (107°C)

- High temperature elastomers – Buna up to 225°F (107°C); FKM up to 350°F (177°C); PTFE (Derivative) Encapsulated up to 450°F (232°C), FFKM to 500°F (260°C).
- Samarium Cobalt magnets to 500°F (260°C). Standard Neodymium Iron Boron magnets rated to 225°F (107°C)
- Extra clearances, depending on temperature. Contact factory for clearance specifications.
- Pump should be operated at slower than normal speeds, which may require a larger pump.

For Abrasive or Dirty Liquids

- If possible, filter or strain out the abrasives present.
- Wear resistant bushings (hardened iron) and hardened shaft.
- Pump should be operated at slower than normal speeds, which may require a larger pump.
- Consult factory regarding external flush option or hardening options of other parts.

MOTOR SPEED PRODUCT LINE:
CAST IRON SEALLESS MAG DRIVE PUMPS
SERIES 855

DIMENSIONS – SERIES 855U PUMPS – "GS-KKE" SIZES (IN)

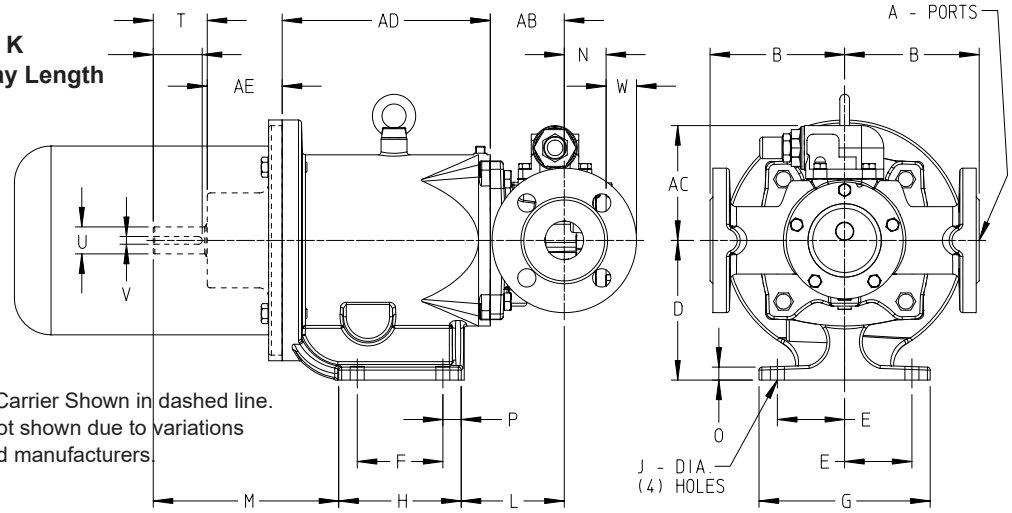

Optional Bearing Carrier Shown in dashed line.
Length of motor not shown due to variations between types and manufacturers.

Coupling	Pump Model	A④	B	L	N	W	AB	AC
A	GS 855 U	1	4.00	3.74	1.94	0.32	2.56	4.68
	GG 855 U	1	4.00	3.74	1.94	0.32	2.56	4.68
A or B	HJ 855 U	1.5	5.5	4.21	1.69	1.26	3.03	4.68
A or B	HL 855 U	1.5	5.5	4.21	1.69	1.26	3.03	4.68
B	AS 855 U	3	5.91	4.69	2.65	1.10	3.62	8.12
B	AK 855 U	3	5.91	4.69	2.65	1.10	3.62	8.12
B	AL 855 U	3	5.91	4.69	2.65	1.10	3.62	8.12
C	AS 855 U	3	5.91	5.44	2.65	1.10	4.37	8.12
C	AK 855 U	3	5.91	5.44	2.65	1.10	4.37	8.12
C	AL 855 U	3	5.91	5.44	2.65	1.10	4.37	8.12
C	KE 855 U	3	6.69	5.57	2.53	1.40	4.50	8.79
C	KKE 855 U	3	6.69	5.57	2.53	1.40	4.50	8.79

④ ANSI B16.5-Compatible 125# Class Flat Face Flanges

⑤ Bearing Carrier (shown in dashed line) or NEMA-C Flange Motor Mount

⑥ An Adapter plate 0.56" thick is mounted between "C" coupling and 213 through 256TC motor (dimension not included in table)

⑦ An Adapter plate 1.29" thick is mounted between "C" coupling and 284/286 TC motor (dimension not included in table)

Access hole for temperature probe is 1/4" NPT (dimension not included in table)

Coupling	Drive⑤	D	E	F	G	H	J	K	M	O	P	T	U	V	AD	AE
A	Bearing Carrier	4.50	2.75	4.00	7.00	5.71	0.56	1.88	5.00	0.53	0.76	2.06	0.875	0.19	7.34	2.50
	56C, 145 TC	4.50	2.75	3.50	7.00	5.71	0.56	-	-	0.53	0.76	-	-	-	7.34	-
	182/184TC	5.12	2.75	4.00	7.00	5.71	0.56	-	-	0.53	0.76	-	-	-	7.60	-
B	Bearing Carrier	5.50	2.75	4.25	7.00	5.78	0.56	2.12	7.60	0.53	0.78	2.72	1.125	0.25	8.73	3.06
	182/184TC	5.50	2.75	4.25	7.00	5.78	0.56	-	-	0.53	0.78	-	-	-	8.73	-
	213/215TC	5.50	2.75	4.25	7.00	5.78	0.56	-	-	0.53	0.78	-	-	-	9.11	-
	254/256TC	5.50	2.75	4.25	7.00	5.78	0.56	-	-	0.53	0.78	-	-	-	9.73	-
C	Bearing Carrier	6.69	3.75	5.75	10.00	8.53	0.945	2.50	11.14	0.76	1.40	4.07	1.875	0.50	11.20	5.50
	254/256TC	6.69	3.75	5.75	10.00	8.53	0.945	-	-	0.76	1.40	-	-	-	12.25	-
	284/286TC	6.69	3.75	5.75	10.00	8.53	0.945	-	-	0.76	1.40	-	-	-	12.87	-

* Nominal motor shaft height for NEMA motor frames listed for reference only.
⑥ Motors with a 7" center height will require a minimum .31" spacer under the bracket foot to provide proper motor clearance.

Note: Belt drive not recommended for A or B Couplings.

These dimensions are average and not for construction purposes. Certified prints on request

DIMENSIONS – SERIES 855M PUMPS – "GS-KKE" SIZES (MM)

(Metric Standard)

K
KeyWay Length

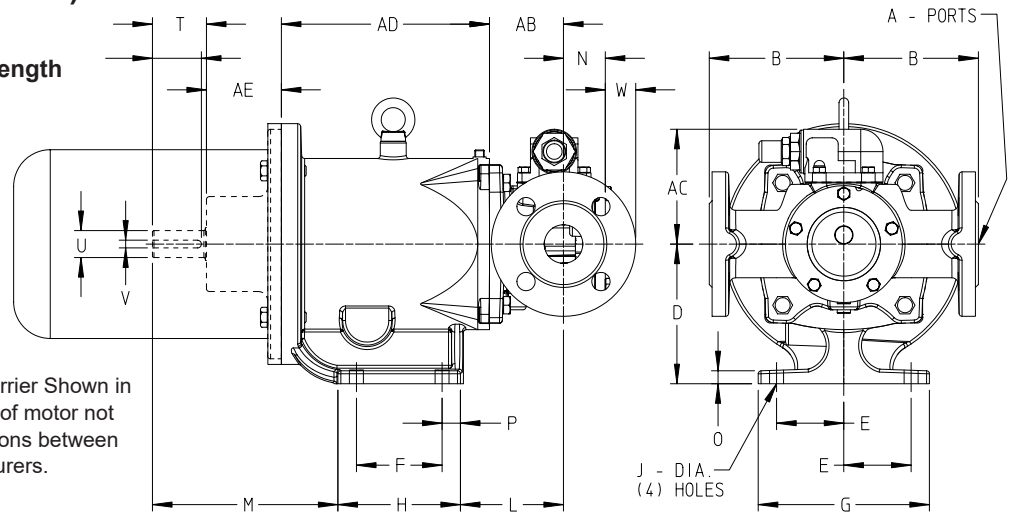

Optional Bearing Carrier Shown in dashed line. Length of motor not shown due to variations between types and manufacturers.

Coupling	Pump Model	A	B	L	N	W	AB	AC
A	GS 855 U	25①	102	95	49.0	8.3	65	119
A	GG 855 U	25①	102	95	49.0	8.3	65	119
A or B	HJ 855 U	40①	140	107	43.0	32.0	77	119
A or B	HL 855 U	40①	140	107	43.0	32.0	77	119
B	AS 855 U	65②	150	119	67.3	28.0	92	206
B	AK 855 U	65②	150	119	67.3	28.0	92	206
B	AL 855 U	65②	150	119	67.3	28.0	92	206
C	AS 855 U	65②	150	138	67.3	28.0	111	206
C	AK 855 U	65②	150	138	67.3	28.0	111	206
C	AL 855 U	65②	150	138	67.3	28.0	111	206
C	KE 855 U	80②	170	143	64.0	35.6	114.3	223
C	KKE 855 U	80②	170	143	64.0	35.6	114.3	223

① DIN 2501-Compatible PN 16/25/40 Raised Face Flanges

② DIN 2501-Compatible PN 25/40 Raised Face Flanges

③ Bearing Carrier (shown in dashed line) or IEC B-5 Flange Motor Mount

Access hole for temperature probe is 1/4" NPT (dimension not included in table)

Coupling	Drive③	D	E	F	G	H	J	K	M	O	P	T	U	V	AD	AE
A	Bearing Carrier	130	69.9	88.9	178	145	14.5	46	191	13.5	19	56.0	28	8	182	77.7
	80/90	130	69.9	88.9	178	145	14.5	-	-	13.5	19	-	-	-	182	-
	100/112	130	69.9	88.9	178	145	14.5	-	-	13.5	19	-	-	-	182	-
B	Bearing Carrier	145	69.9	88.9	178	127.5	14.5	46	191	13.5	19	56.0	28	8	182	77.7
	100/112	145	69.9	88.9	178	127.5	14.5	-	-	13.5		-	-	-	216	-
	132	170	69.9	108	178	146.3	14.5	-	-	13.5		-	-	-	236	-
C	Bearing Carrier	170	95	146	254	216.6	24.0	63	283	19.3	35.6	103.4	48	14	284	139.7
	132	170	95	146	254	216.6	24	-	-	19.3	35.6	-	-	-	284	-
	160 / 180	203	120	165	305	235	24	-	-	19.3	35	-	-	-	314	-

* Nominal motor shaft height for IEC B-5 Flange motor frames listed for reference only.

Note: Belt drive not recommended for A or B Couplings.

These dimensions are average and not for construction purposes. Certified prints on request.

SHIPPING WEIGHTS

The pump design (US or Metric) and the selected coupling size determine which optional bearing carrier will be required for a unit. Optional bearing carrier weights will vary greatly between designs. To determine pump and coupling assembly weight use the table below.

1. Select weight of the pump by size.
2. Add the inner magnet and canister weight.
3. Add outer magnet and bracket assembly weights shown for US or Metric Models.
4. If the bearing carrier is to be used, add bearing carrier weight based on the coupling size being used.

Weights are approximate and have been rounded to the nearest whole number.

1. PUMP ONLY

Pump	Weight	
	Lbs.	Kg
GS-GG " A" Cplg	25	11.3
HJ-HL "A" Cplg	35	15.9
HJ-HL "B" Cplg	35	15.9
AS, AK & AL "B" Cplg	81	36.8
AS, AK & AL "C" Cplg	87	39.5
KE & KKE "C" Cplg	114	51.7

2. INNER MAGNET AND CANISTER

Magnet Size	Weight	
	Lbs.	Kg
MD2-A4	2	0.9
MD2-A9	2.4	1.1
MD2-B14	6.9	3.1
MD2-B32	8	3.6
MD2-B50	9.1	4.1
MD2-C40	17.5	7.9
MD2-C90	19.8	9.0
MD2-C135	22	10.0
MD2-C180	24.3	11.0

3. OUTER MAGNET

Magnet Size	Weight	
	Lbs	Kg
A4	7.8	3.5
A9	9	4.1
B14	16.3	7.4
B32	18	8.2
B50	19.7	8.9
C40	25.2	11.4
C90	28	12.7
C135	30.9	14
C180	33.8	15.3

3. (Cont.) BRACKET ASSEMBLY

	IEC Motor Frame	Weight IEC Design	Weight IEC Design	NEMA Motor Frame	Weight NEMA Design	Weight NEMA Design
		Lbs	Kg		Lbs	Kg
"A" Clpg				56C	36.5	16.6
	80/90	50	22.7	143/145TC*	36.5	16.6
	100/112*	48.8	22.1	182/184TC	51.7	23.5
"B" Cplg	100/112*	42	19.1	182/184TC	39	17.7
	132	50	22.7	213/215TC*	42	19.1
				254/256TC	46	20.9
"C" Cplg	132**	80	36.3	254/256TC	99.5	45.1
	160/180	104	47.2	284/286TC	114	51.7

4. BEARING CARRIER (OPTIONAL) BY COUPLING SIZE Refer To Page 685.5

	US Design		Metric Design	
	Lbs.	Kg	Lbs.	Kg
MD2-A	8	3.6	20	9.1
MD2-B	17	7.7	20	9.1
MD2-C	91	41.3	91	41.3

NPSH REQUIRED

Printed performance curves are not available.

Performance curves can be electronically generated with the Viking Pump Curve Generator on vikingpump.com.

NPSHR data is not available on the Curve Generator.

NPSH (Net Positive Suction Head): The $NPSH_R$ (Net Positive Suction Head Required by the pump) is given in the table below and applies for viscosities through 750 SSU. $NPSH_A$ (Net Positive Suction Head – Available in the system) must be greater than the $NPSH_R$. For a complete explanation of NPSH, see Application Data Sheet AD-19.

FOR VISCOSITIES UP TO 750 SSU – See $NPSH_R$ table below.

$NPSH_R$ for high viscosities can be estimated using the following method:

1. Calculate line loss for a 1 foot long pipe of a diameter matching the pump inlet port size. Use your flow rate and max viscosity.

2. Convert this value into Feet of Liquid (S.G. 1.0)

3. Add this value to the $NPSH_R$ value in the chart below.

$NPSH_R$ – FEET OF LIQUID (Specific Gravity 1.0), Viscosities up to 750 SSU

PUMP SIZE	PUMPS SPEED, RPM														
	100	125	155	190	230	280	350	420	520	640	780	950	1150	1450	1750
H, HL	—	—	—	—	1.7	1.8	1.9	2.1	2.4	2.8	3.4	4.5	6.2	9.5	13.5
K, KK	—	1.7	1.8	1.9	2.1	2.3	2.8	3.3	4.4	6.3	9.1	—	—	—	—
L	1.6	1.8	2.0	2.2	2.5	3.0	3.8	5.0	7.3	10.8	—	—	—	—	—
LQ	1.6	1.8	2.0	2.2	2.5	3.0	3.8	5.0	7.3	10.8	—	—	—	—	—
LL	1.6	1.8	2.0	2.2	2.5	3.0	3.8	5.0	7.3	—	—	—	—	—	—
LS	1.6	1.8	2.0	2.2	2.5	3.0	3.8	5.0	7.3	10.8	—	—	—	—	—
Q, QS	1.9	2.1	2.3	2.7	3.3	4.2	6.1	8.4	12.7	—	—	—	—	—	—

PERFORMANCE CURVE NOTES CONT'D

SELECTING THE CORRECT VIKING MAG DRIVE® COUPLING

1. Find pump HP and speed from the performance curves, which can be electronically generated with the Viking Pump Selector Program, located on www.vikingpump.com.
2. Calculate the application torque (T), using this formula:

$$T\ (\text{FT-LB}) = \frac{HP}{SPEED} \times 5252$$

3. Select the temperature correction factor (TCF) from Table 1 or Table 2.

STANDARD NEODYMIUM MAGNETS (For Application Temperatures Below 225°F.)							
Application Temp. (°F)	AMB	100	125	150	175	200	225
TCF	1.0	.94	.88	.82	.76	.70	.64

Table 1: Temperature Correction Factors

OPTIONAL SAMARIUM COBALT MAGNETS (For Application Temperatures Above 225°F.)					
Application Temp. (°F)	175	200	300	400	500
TCF	.74	.73	.69	.63	.59

Table 2: Temperature Correction Factors

4. Divide calculated application torque by TCF to get adjusted application torque.
5. Select coupling with rating equal to or greater than "adjusted application torque" from Table 3.

MAGNETIC COUPLING TORQUE RATING TABLE	
①Coupling Size	Torque (FT-LBS)
MD2-A4	4
MD2-A9	9
MD2-B14	14
MD2-B32	32
MD2-B50	50
MD2-C40	40
MD2-C90	90
MD2-C135	135
MD2-C180	180

Table 3

EXAMPLE

1. A GG-855 is required to pump10 gpm of 20 cSt liquid at 1750 RPM, 50 psi differential pressure.

   Temperature is 100°F.

   From the curve generator, required HP is 1.05.
2. Calculate torque (T).

$$\text{TORQUE (T)} = \frac{1.05}{1750} \times 5252 = 3.15\ \text{FT-LB}$$

3. From the temperature correction factor table, the correction factor (TCF) = .94.
4. Calculate adjusted application torque.

$$\text{ADJUSTED APPLICATION TORQUE} = \frac{3.15}{0.94} = 10.25\ \text{FT-LB}$$

5. Select coupling.

A STANDARD NEODYMIUM MD2-A4 COUPLING IS THE PROPER SELECTION